DIMNS MARKED DENOTES (S) SAFETY/REGULATION (F) CRITICAL FIT/FUNCTION (M) MAJOR FIT/FUNCTION (M2) MINOR FIT/FUNCTION

PART NO	DIM'A'	DIM'B'	FINISH GRIND DIA	(F) PLATING THK. BEFORE POST CHROME GRINDING	(F) PLATING THK. AFTER POST CHROME GRINDING	Ø 'C'	CORROSION RESISTANCE
34040435-4	162	126.4	Ø10.928~Ø10.938	24±4μm	20±4μm	Ø10.960~Ø10.986	UP TO 24Hrs CASS TEST, RATING NO.9 MIN.

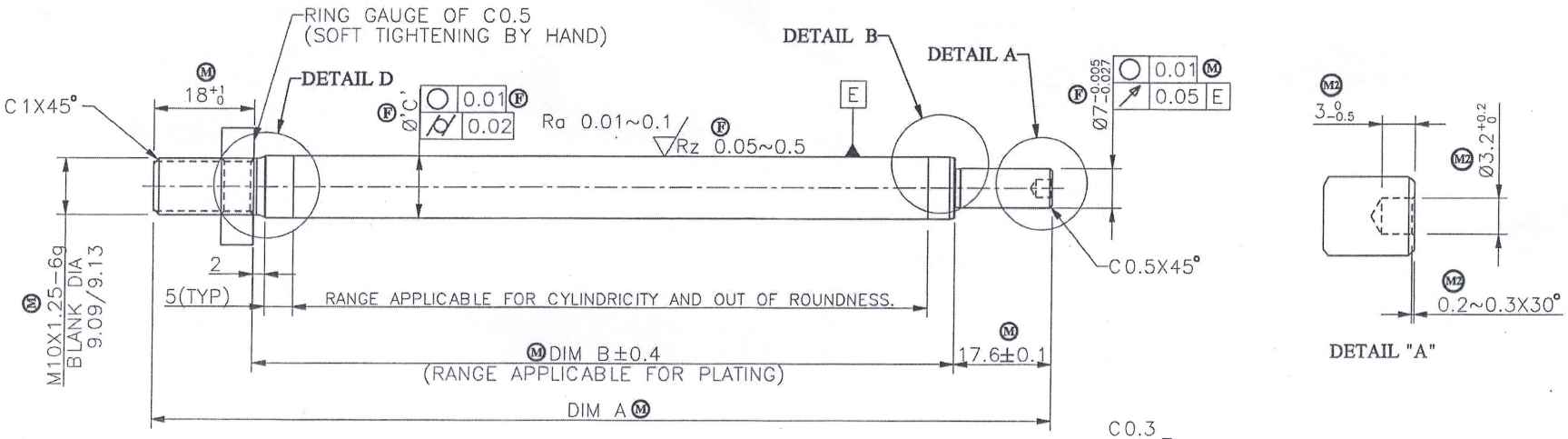

DETAIL "A"

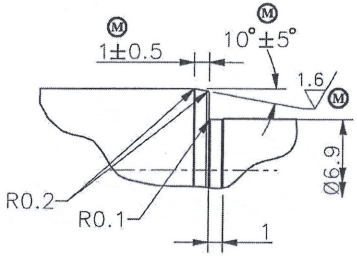

DETAIL "B"

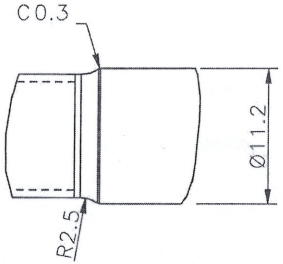

DETAIL "D"
(PROFILE AT MACHINING STAGE)

MASTER COPY ONLY IF RED
CONTROLLED COPY ONLY IF RED GABRIEL NASHIK

NOTES:-
1. TO BE GROUND TO FINISH SIZE AFTER PLATING.
   MATERIAL REMOVAL SHALL BE 3 TO 5μm ON DIAMETER
2. UNLESS OTHERWISE SPECIFIED, TOLERANCE IN DIMENSIONS
   OF MACHINING AREA SHALL BE IN ACCORDANCE WITH TABLE.
(M) 3. PLATING VALIDATION & SURFACE DEFECT QUALITY CHECK AS PER GSP0103.
   CHROME HARDNESS : HV800 MIN/25 gms LOAD.
4. PARTING PIP NOT PERMITTED.
(M) 5. MUST BE NO CHATTER, SCRATCH, ABRASION AND BRUISE NO
   SURFACE OF Ø11
(M) 6. MUST BE NO PIN HOLE, ROUGH SURFACE AND BLISTER AFTER PLATING

DATE	REV	ALTERATION	E.C.N.NO
29.09.16	00	NEW RELEASE FOR MASS PRODUCTION	58/16

SUPERSEDES : 34040435-2
GENERAL TOLERANCE ASPER : -
DESIGN SOURCE REF.
RELEASE FOR: ☐ COSTING ☐ PROTOTYPE ☐ OTS ☐ PRE-PRODUCTION ■ PRODUCTION

GABRIEL INDIA LTD.

SCALE	SHEETS	FINISH:	MASS:
1:1	1 / 1	HARD CHROME PLATING	109 g

DRAWN BY: Arun C. DATE: 18/10/16
CHECKED BY: DATE: 18/10/16
APPROVED BY: DATE: 18/10/16
NAME:- PISTON ROD
MATERIAL:- 3401010 AS PER (S) GP 136-5
PART NO:- 34040435-4 REV. 00

ALL DIMENSIONS ARE IN MM. | NO MANUAL ALTERATION | DO NOT SCALE | IF IN DOUBT PLEASE ASK | SIZE : A3

XF331 RCU

CONFIDENTIAL: THIS DRAWING AND THE INFORMATION THEREIN ARE THE PROPERTY OF GABRIEL INDIA LTD., AND SHALL NOT BE REPRODUCED, COPIED RECORDED IN ANY MEDIA, USED FOR ANY OTHER PURPOSE OR DELIVERED AND/OR DISCLOSED TO ANY THIRD PARTY WITHOUT WRITTEN CONSENT OF GABRIEL.